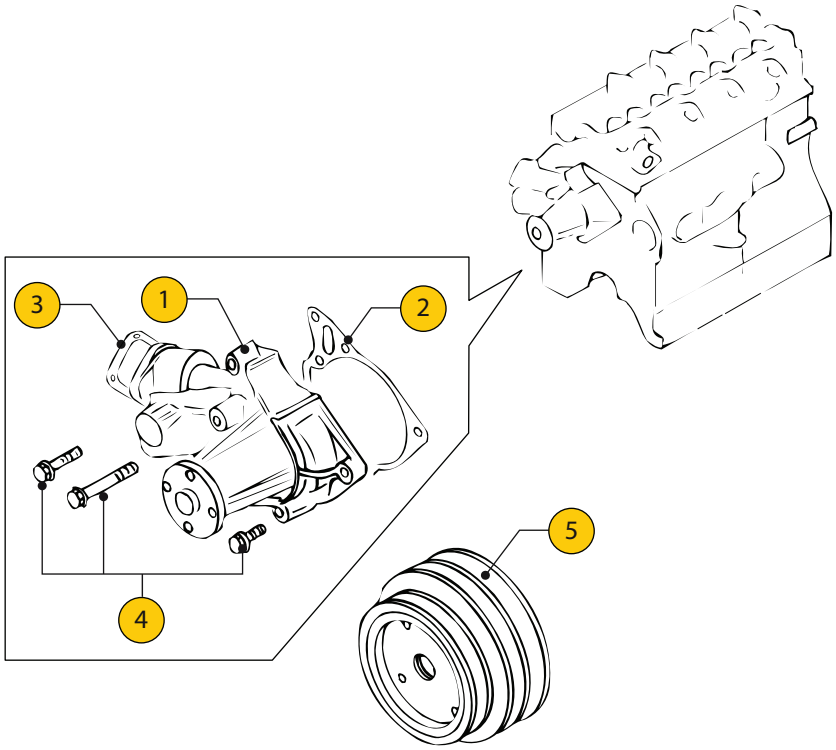

VH4.65 VH4.80 **Circulatiepomp** **Circulation pump**

pos.	qty	part	benaming	description
1	1	**STM4934**	Circulatiepomp cpl.	Circulation pump cpl.
2	1	**STM4935**	Pakking	Gasket
3	4	**STM4936**	Pakking	Gasket
4	1	**VP000380**	Set bouten	Set bolts
5	1	**STM4939**	Snaarschijf	Pulley